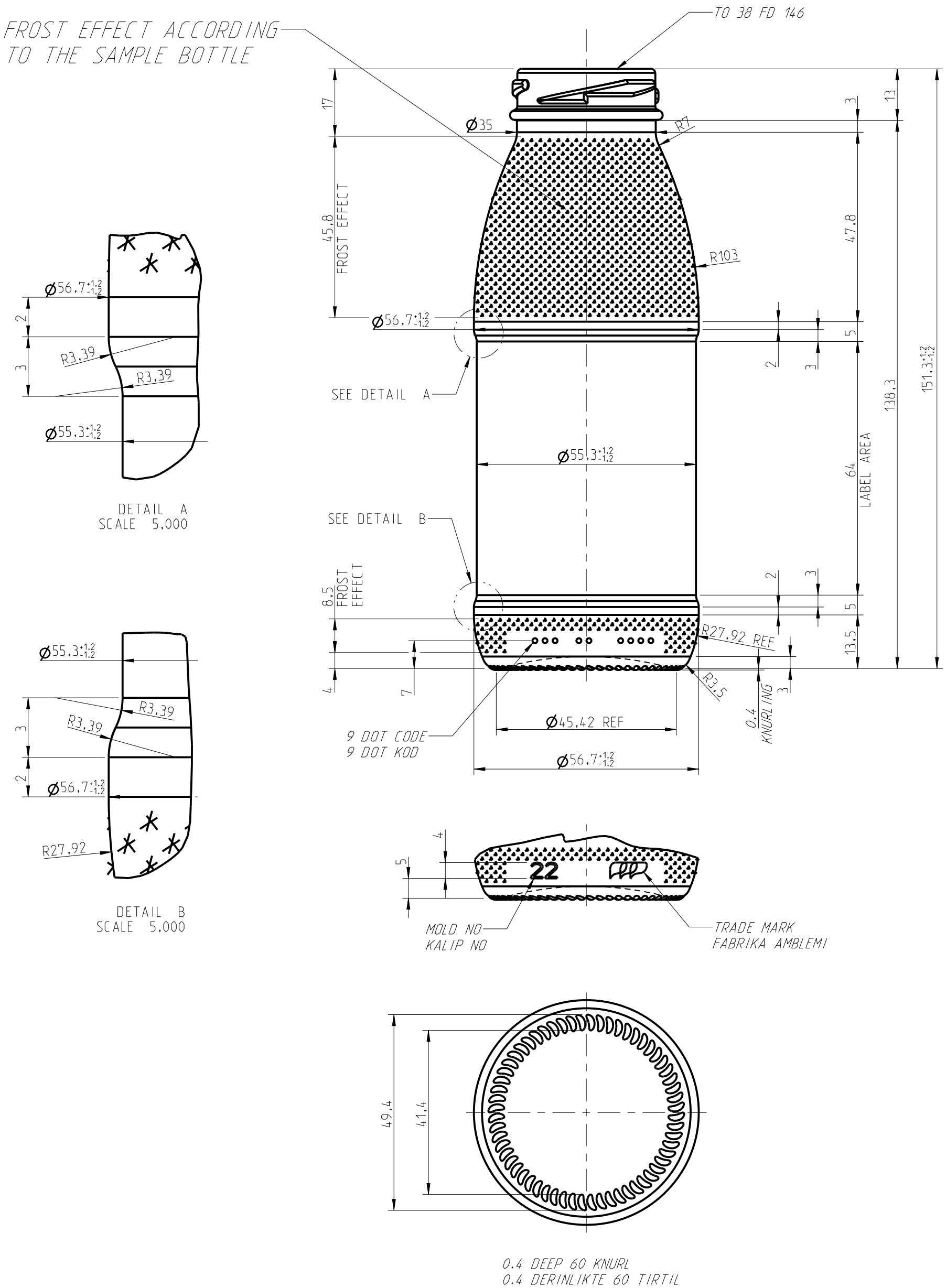

VERILMEYEN TOLERANSLAR-UNSPECIFIED TOLERANCE ±0.1
EKSANTRIKLIK TOLERANSI-ECCENTRICITY TOLERANCE ±0.05

Bu tasarim OMCO ISTANBUL KALIP SANAYI VE TICARET A.S. tarafindan gerceklestirilmis olup, butun haklari musteriye devredilinceye kadar sirketimize aittir.

This design remains property of OMCO KALIP SANAYI VE TICARET A.S. until exclusive industrial properiatry rights are dully transferred to customer.

	DEGISIKLIKLER / REVISIONS	TARIH/DATE	YAPAN/MD.BY	KONT/CHKD.BY
OMCO İstanbul KALIP SANAYİ VE TİCARET A.Ş.	CIZ/DRAWN_BY	GC	DOLUM HACMI cc FILLING CAP.cc	250 ±5
	KONT/CHKD BY	MO	SILME HACMI cc BRIMFULL CAP.cc	262 ±5
	TARIH/DATE	11.03.11	AGIRLIK gr WEIGHT gr	135 ±5
OLCEK:	MUSTERI / CUSTOMER - ULKE / COUNTRY			KOD NO/CODE NO
SCALE:	MODERN COMPANY / SYRIA - SURIYE			11963102
1	URUN / PRODUCT			C.K./W.T.TEORIK
	250 ML BUON GIORNIO			2